DEEP COOL

INSTALLATION GUIDE

This installation guide is applicable for NEPTWIN Series

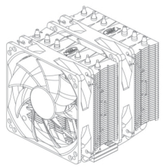

NEPTWIN

PRODUCT SCHEMATIC DRAWING

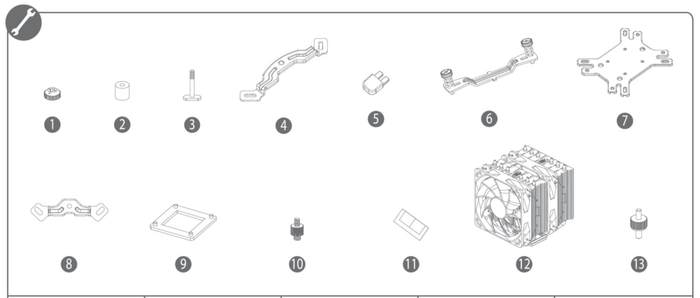

1	Nut	4 pcs	2	Insulation Pillar	4 pcs	3	Screw Bolt	4 pcs	
4	Mounting Bracket(Intel)	2 pcs	5	De-Vibration Buckle	4 pcs	6	Retention Plate	1 pc	
7	Back Plate	1 pc	8	Mounting Bracket(AMD)	2 pcs	9	Insulating Washer (For LGA775 only)	1 pc	
10	Double-screw Bolt (For LGA20XX only)	4 pcs	11	Thermal Grease	1 pc	12	Heatsink set	1 pc	
13	Double-screw Bolt (For AM4 only)	4 pcs							

INTEL

LGA1366
LGA1156
LGA1155
LGA1151
LGA1150
LGA775

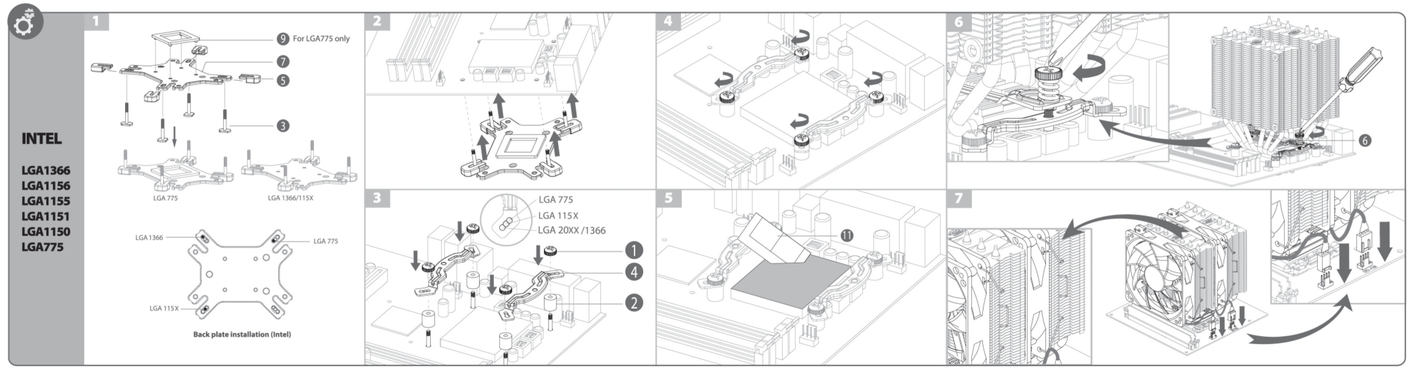

AMD

AM4
AM3+
AM3
AM2+
AM2
FM2+
FM2
FM1

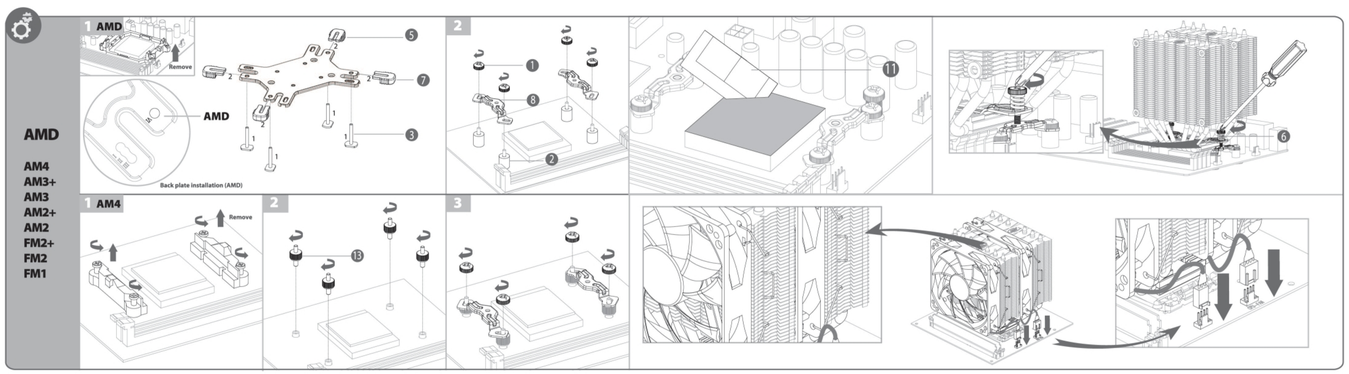

INTEL

LGA20XX

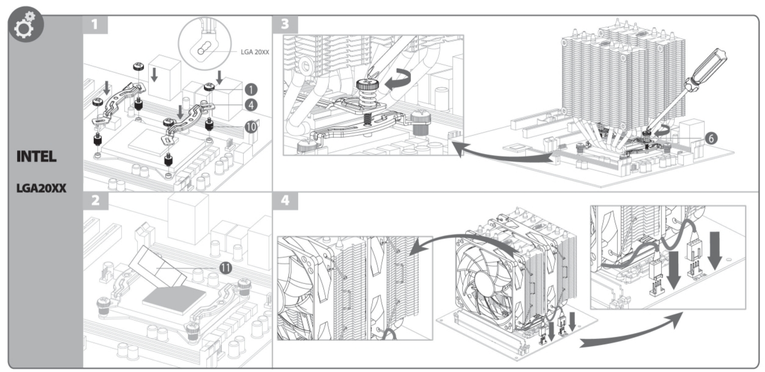

www.deepcool.com

Brands and designs are trademarks from Beijing Deepcool Industries Co., Ltd.
Devices not included.
All rights reserved.

Beijing Deepcool Industries Co., Ltd.

MADE IN CHINA

DEEP COOL
九州风神

安装说明书

此说明书适用于九州风神大霜塔系列。

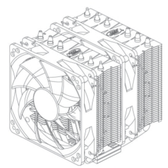

大霜塔

产品示意图

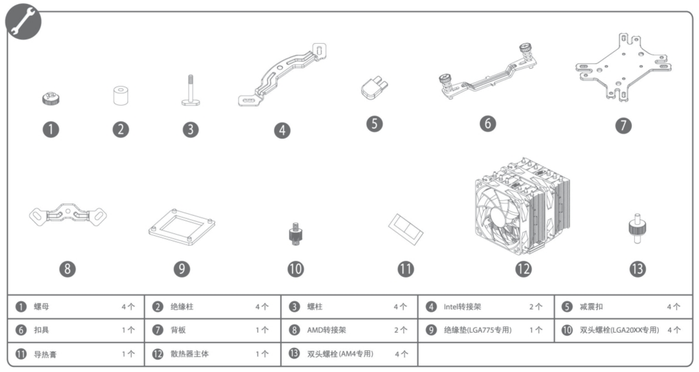

1	螺母	4个	2	绝缘柱	4个	3	螺柱	4个	
4	Intel转接架	2个	5	减震扣	4个	6	扣具	1个	
7	背板	1个	8	AMD转接架	2个	9	绝缘垫(LGA775专用)	1个	
10	双头螺栓(LGA20XX专用)	4个	11	导热膏	1个	12	散热器主体	1个	
13	双头螺栓(AM4专用)	4个							

INTEL

LGA1366
LGA1156
LGA1155
LGA1151
LGA1150
LGA775

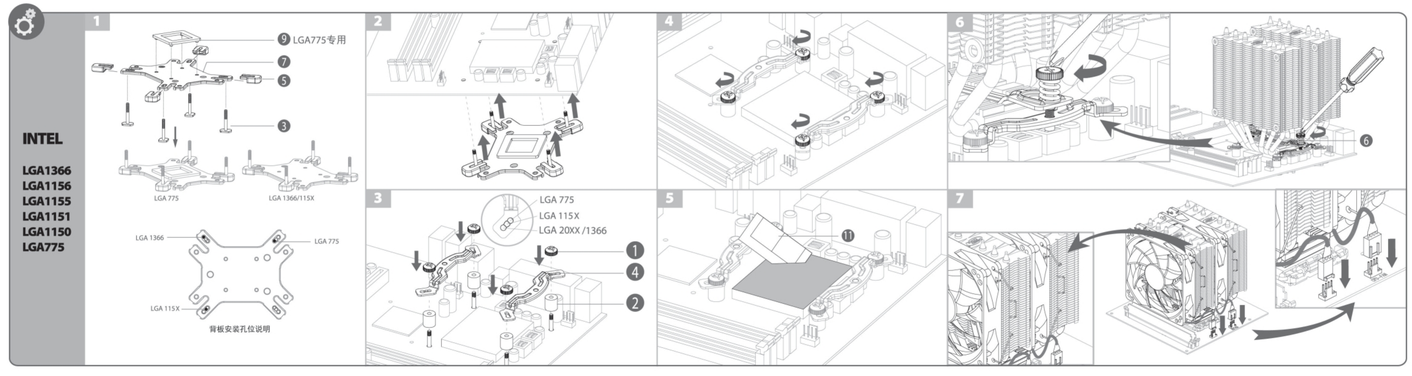

AMD

AM4
AM3+
AM3
AM2+
AM2
FM2+
FM2
FM1

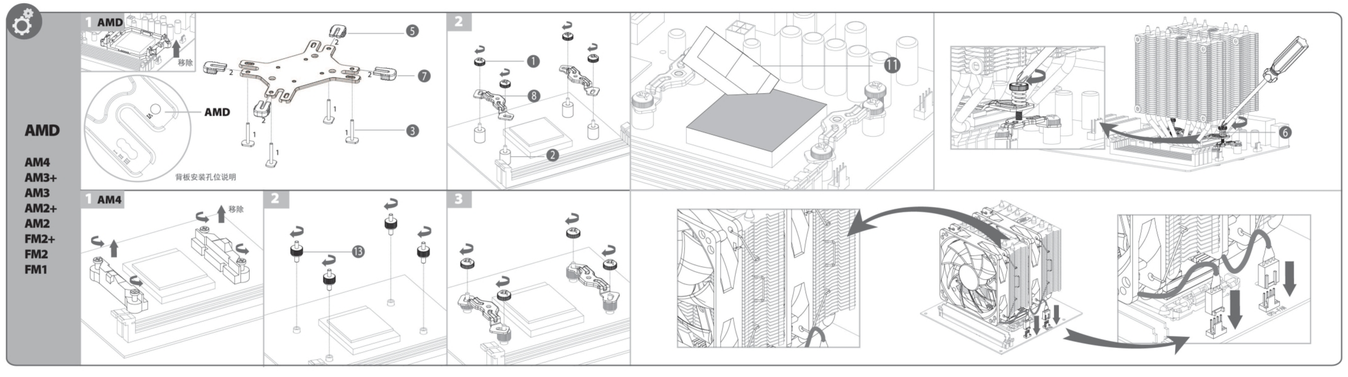

INTEL

LGA20XX

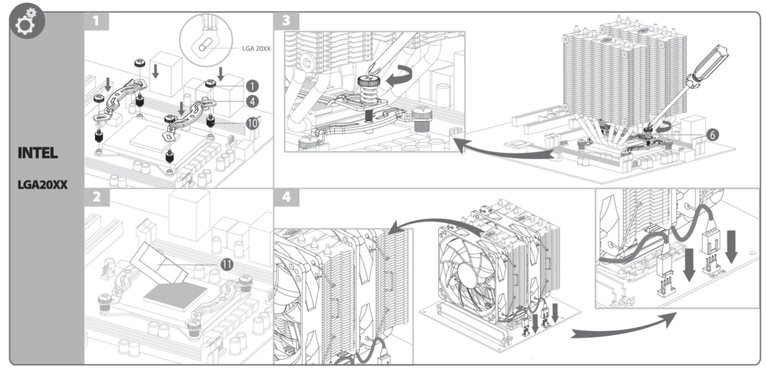

www.deepcool.com

九州风神公司2017版权所有。
手册中提及的其他商标及服务商标均是其产品。
出品：北京市九州风神科技有限公司
地址：北京市海淀区海锦路9号第10号楼
中国制造